62

TIE DOWNS

Section 62

TIE DOWN

Photos of Western secured loads 62-4
Photos of Western equipped Tie Downs 62-5
Drawings. . . . . .

Western Heavy Duty Tie-Down equipment leads the field in position securement of heavy equipment. The strongest of chain married with ruggedly designed components, produce the ultimate in chain assembly securements available to the railroad industry. The ½ inch Super-Alloy chain has a working load limit of 13,750 lbs. and proof test of 27,500 lbs. All chain components are equal to or exceed the ultimate breaking strength of the component chain assuring the ultimate in assembly strength.

Western pioneered the use of inboard retainer castings as opposed to the channel type which are costly to install and difficult to maintain.

The inboard retainer allows for complete utilization of chain assemblies as they may be quickly and easily relocated between stake pocket and inboard retainers, thus cutting down original equipment costs and subsequent maintenance.

With the versatility of the slide-lock, car utilization increases greatly, as a single car so equipped may be used for heavy road machinery, containers, lumber, logs, pipe, army tanks and heavy rubber tired vehicles.

WESTERN RAILROAD SUPPLY COMPANY
Division of Western Industries, Inc.
Chicago, Illinois 60632

PRINTED IN U.S.A.

The use of wood blocking is the horse and buggy method of securement..

IT IS COSTLY, TIME CONSUMING, and FREQUENTLY INEFFECTIVE

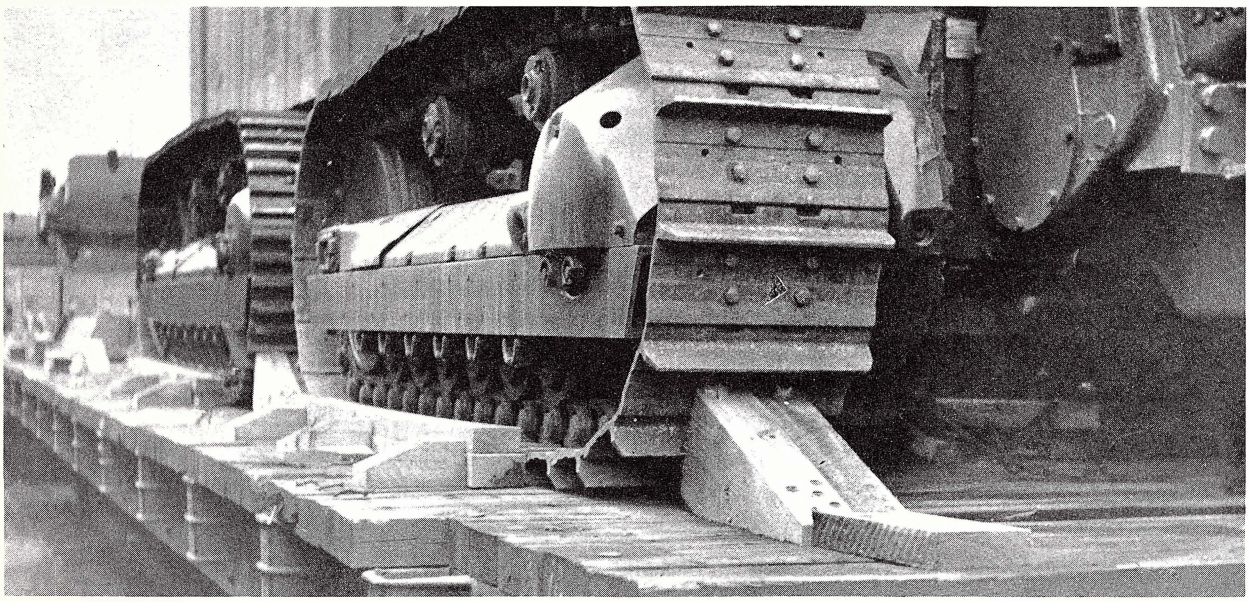

DON'T RUN THE RISK OF HAVING THE LOAD GO FROM THIS . . . . .

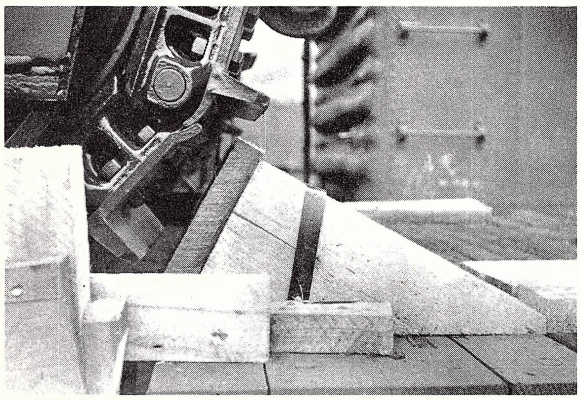

TO THIS

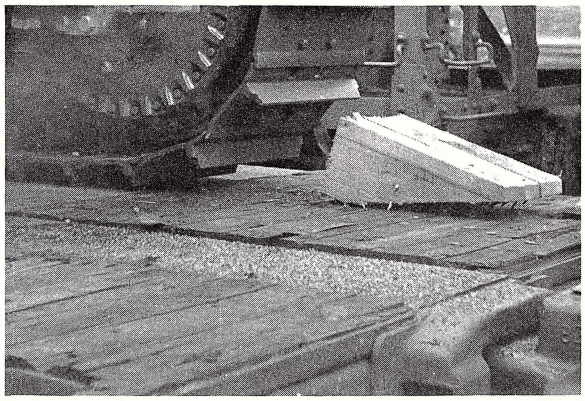

OR EVEN THIS

IN A MATTER OF MINUTES!

NOW! if you want positive securement...

TIE DOWN For HEAVY EQUIPMENT

HAS INHERENT HOLDING POWER FOR MAXIMUM SECUREMENT

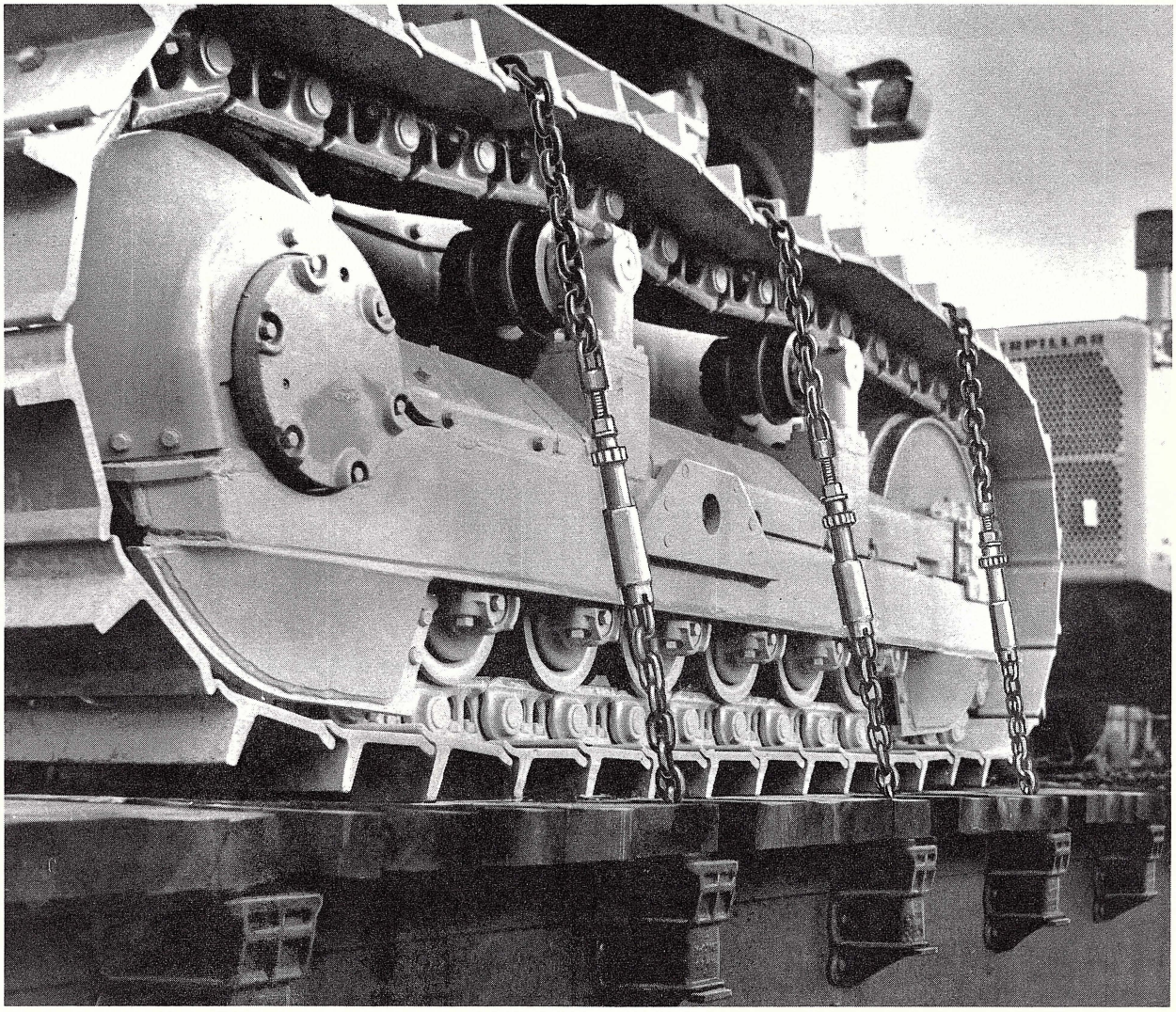

Here are the WESTERN Tie Down points of superior performance:

- *CHAIN IS SUPER ALLOY, 27,500 LBS. PROOF TEST*
- *INSTALLATION IS QUICK AND EASY*
- *POSITIVE LOCKING*
- *THEFT-PROOF*

If you are not already using WESTERN Tie Downs, write today and find out how we can help increase your car revenue.

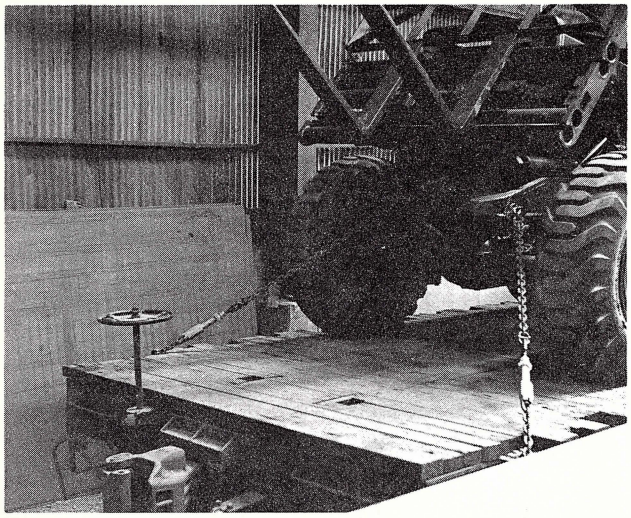

Heavy duty rubber tired equipment
as secured using only stakepocket
tie downs. (Inboard types also available.)

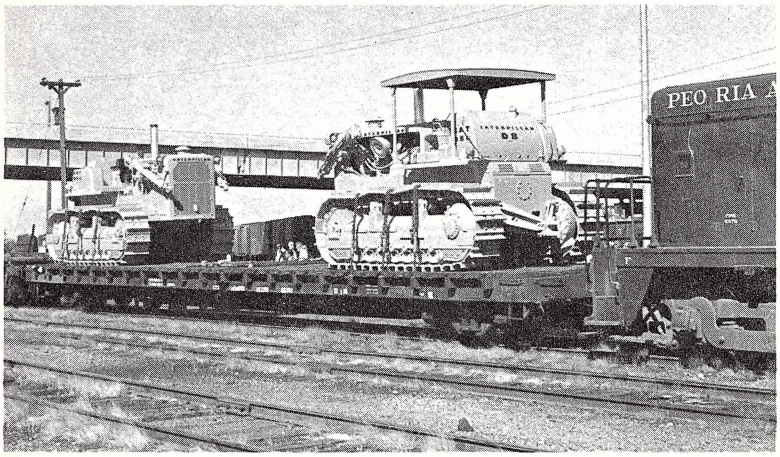

Heavy duty tie-downs used in
secureing heavy crawler tractors.

The lowest cost inboard
securement available to
the Railroads today.
(See Drawing J-5450 R)

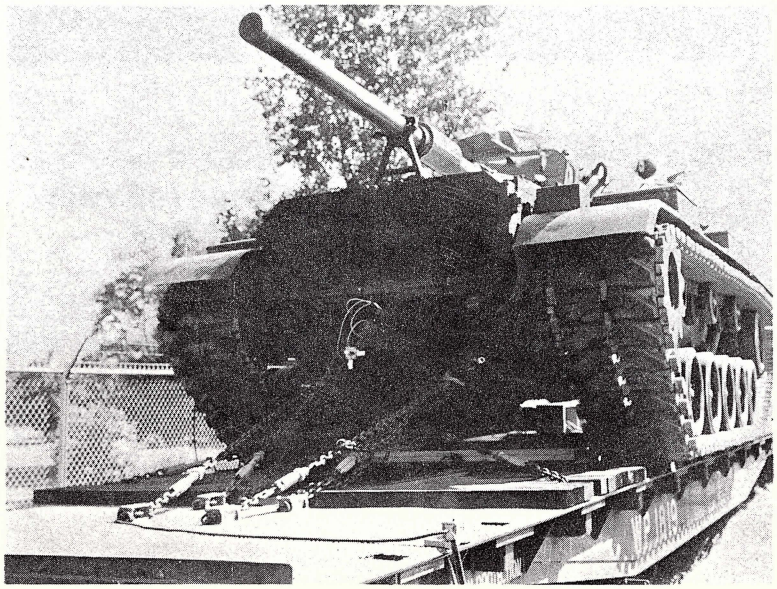

Method of secureing tie-downs across deck of car.

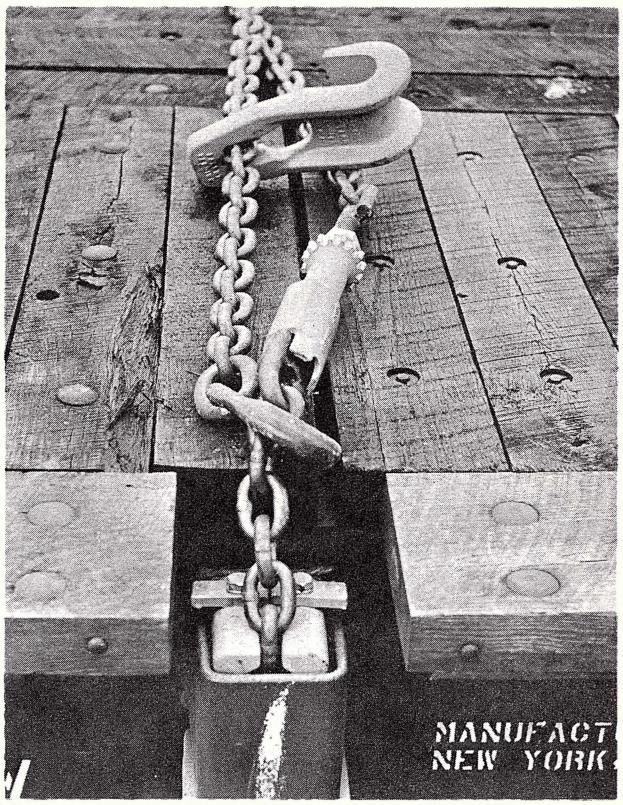

Assembly as secured in stake pocket and across car deck.

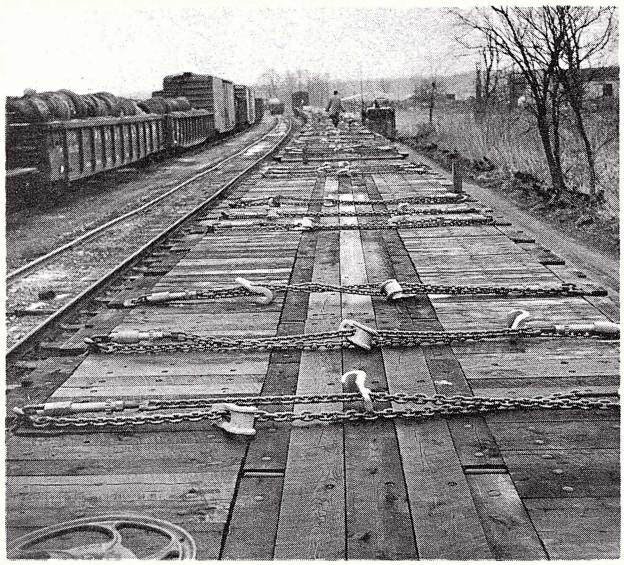

Car equipped to secure three heavy duty tractors.

Side view of car above left showing retainer locations. (Western chain storage boxes may be used for "clear deck" return.)

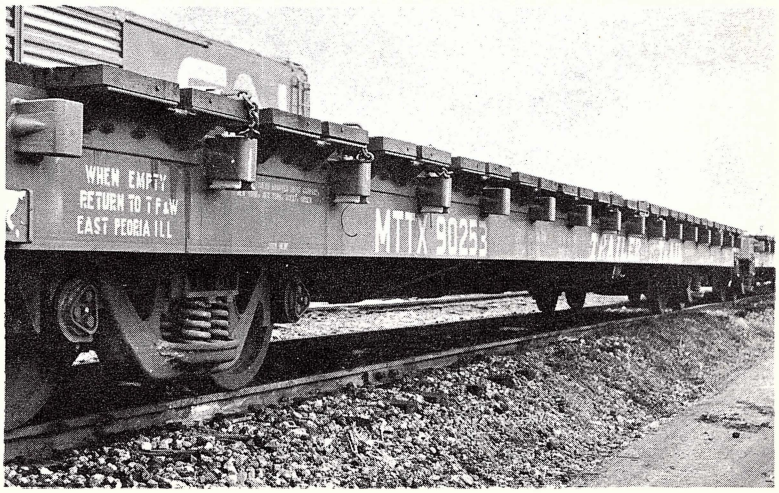

CHAIN : ½" SUPER-ALLOY
WORKING LOAD : 13,750 LBS. MAX.
PROOF TEST : 27,500 LBS.

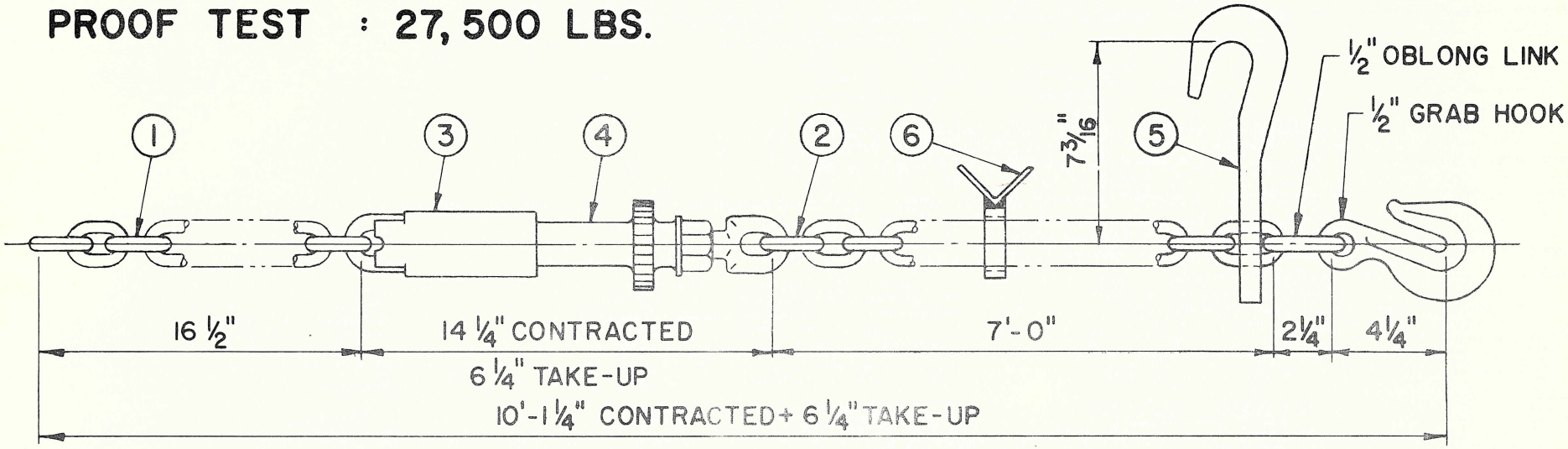

ITEM	DESCRIPTION	MATERIAL	PART NO.	Q'TY.
1	BOTTOM CHAIN ASS'Y.	ALLOY STL.	J-5351	1
2	TOP CHAIN ASS'Y.	"	J-5352	1
3	LOCKING SLEEVE	DUCT. IRON	J-5356	1
4	TURNBUCKLE BODY	"	J-5357	1
5	CRAWLER TREAD CLAMP	"	J-5348	1
6	LOAD PROTECTOR	WELDMENT	J-5385	1

WELD BEAD APPLIED ON END OF EACH EYE BOLT TO PREVENT REMOVAL OF ITEM 1 & 2

USE WESTERN PART NO. J-5358 WRENCH FOR ITEM 4 (FURNISHED WITH EACH CAR SET OF TIE-DOWNS)

WEIGHT : 46.5 LBS.

WESTERN PART NO. J-5389

PATENT PENDING

WESTERN INDUSTRIES, INC.
CHICAGO 32

COMPLETE CHAIN ASSEMBLY
FOR
WESTERN ALL PURPOSE
CHAIN TIE-DOWN
-SALES DRAWING-

SCALE: NONE
DRW. M.H. 10-21-66
DWG. NO. J-5389-SD

CHAIN : ½" SUPER-ALLOY
WORKING LOAD: 13,750 LBS. MAX.
PROOF TEST : 27,500 LBS.

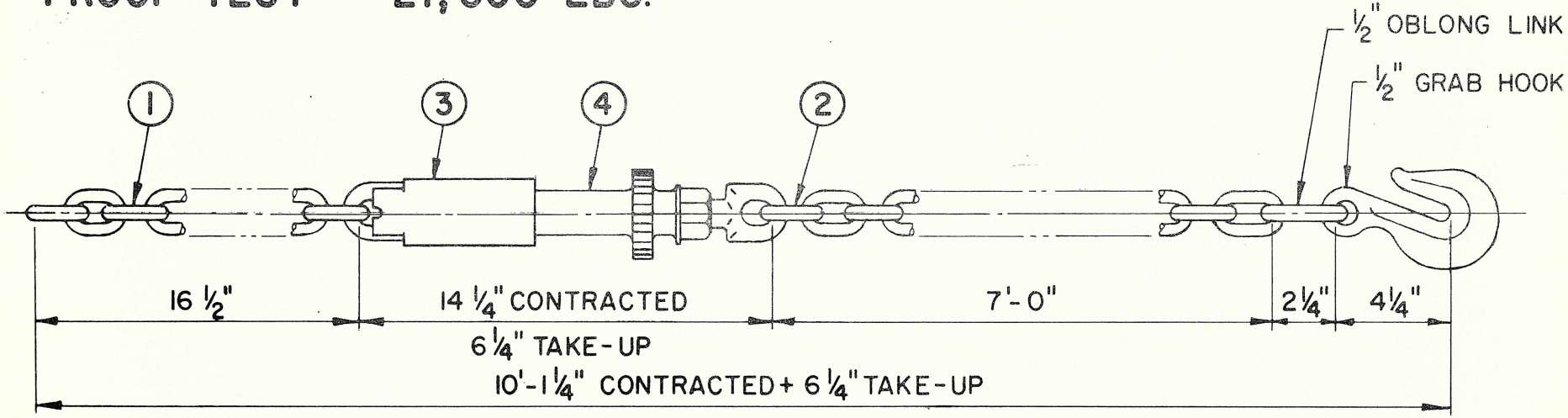

ITEM	DESCRIPTION	MATERIAL	PART NO.	Q'TY.
1	BOTTOM CHAIN ASS'Y.	ALLOY STL.	J-5351	1
2	TOP CHAIN ASS'Y.	"	J-5352	1
3	LOCKING SLEEVE	DUCT. IRON	J-5356	1
4	TURNBUCKLE BODY	"	J-5357	1

WELD BEAD APPLIED ON END OF EACH EYE BOLT TO PREVENT REMOVAL OF ITEM 1 & 2

USE WESTERN PART NO. J-5358 WRENCH FOR ITEM 4 (FURNISHED WITH EACH CAR SET OF TIE-DOWNS)

WEIGHT : 35.0 LBS.

WESTERN PART NO. J-5449

PATENT PENDING

WESTERN INDUSTRIES, INC.

CHICAGO 32

COMPLETE CHAIN ASSEMBLY
FOR
WESTERN ALL PURPOSE
CHAIN TIE-DOWN
-SALES DRAWING-

SCALE: NONE
DRW. M.H. 10-24-66
DWG. NO. J-5449-SD

CHAIN : ½" SUPER-ALLOY
WORKING LOAD: 13,750 LBS. MAX.
PROOF TEST : 27,500 LBS.

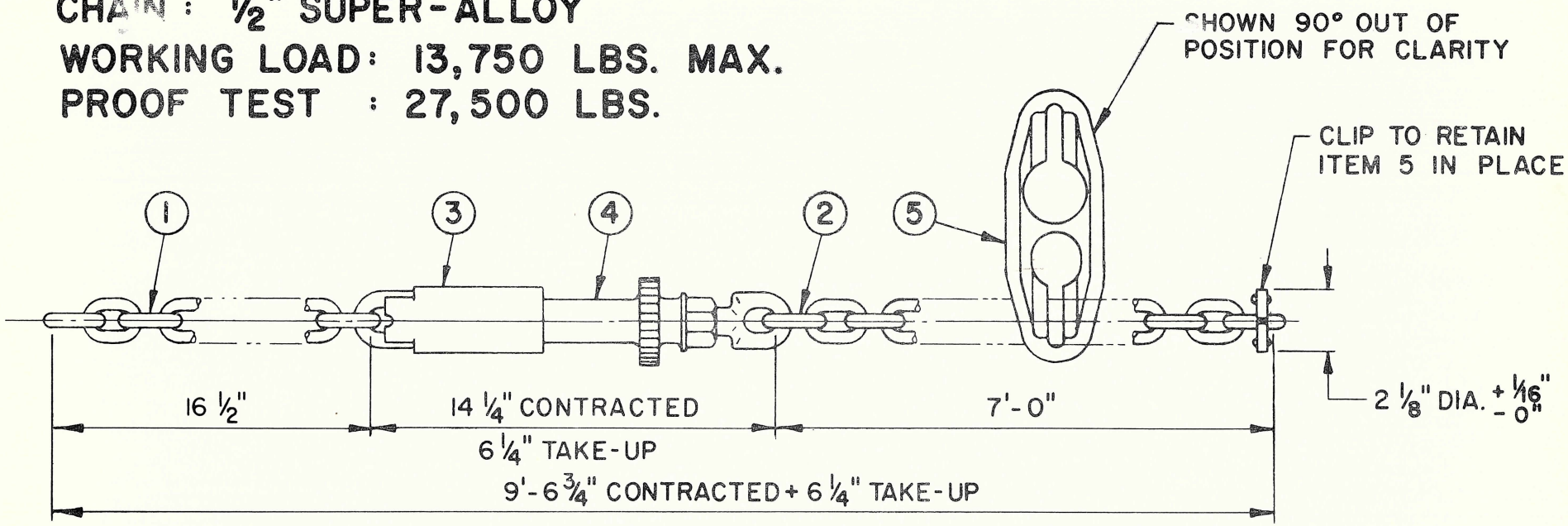

ITEM	DESCRIPTION	MATERIAL	PART NO.	Q'TY.
1	BOTTOM CHAIN ASS'Y.	ALLOY STL.	J-5351	1
2	TOP CHAIN ASS'Y.	"	J-5419	1
3	LOCKING SLEEVE	DUCT. IRON	J-5356	1
4	TURNBUCKLE BODY	"	J-5357	1
5	SLIDE-LOCK	"	J-5399	1

WELD BEAD APPLIED ON END OF EACH EYE BOLT TO PREVENT REMOVAL OF ITEM 1 & 2

USE WESTERN PART NO. J-5358 WRENCH FOR ITEM 4 (FURNISHED WITH EACH CAR SET OF TIE-DOWNS)

WEIGHT : 37.0 LBS.

WESTERN PART NO. J-5422

PATENT PENDING

WESTERN INDUSTRIES, INC.

CHICAGO 32

COMPLETE CHAIN ASSEMBLY
FOR
WESTERN ALL PURPOSE
CHAIN TIE-DOWN
-SALES DRAWING-

SCALE: NONE
DRW. M.H. 10-26-66
DWG. NO. J-5422-SD

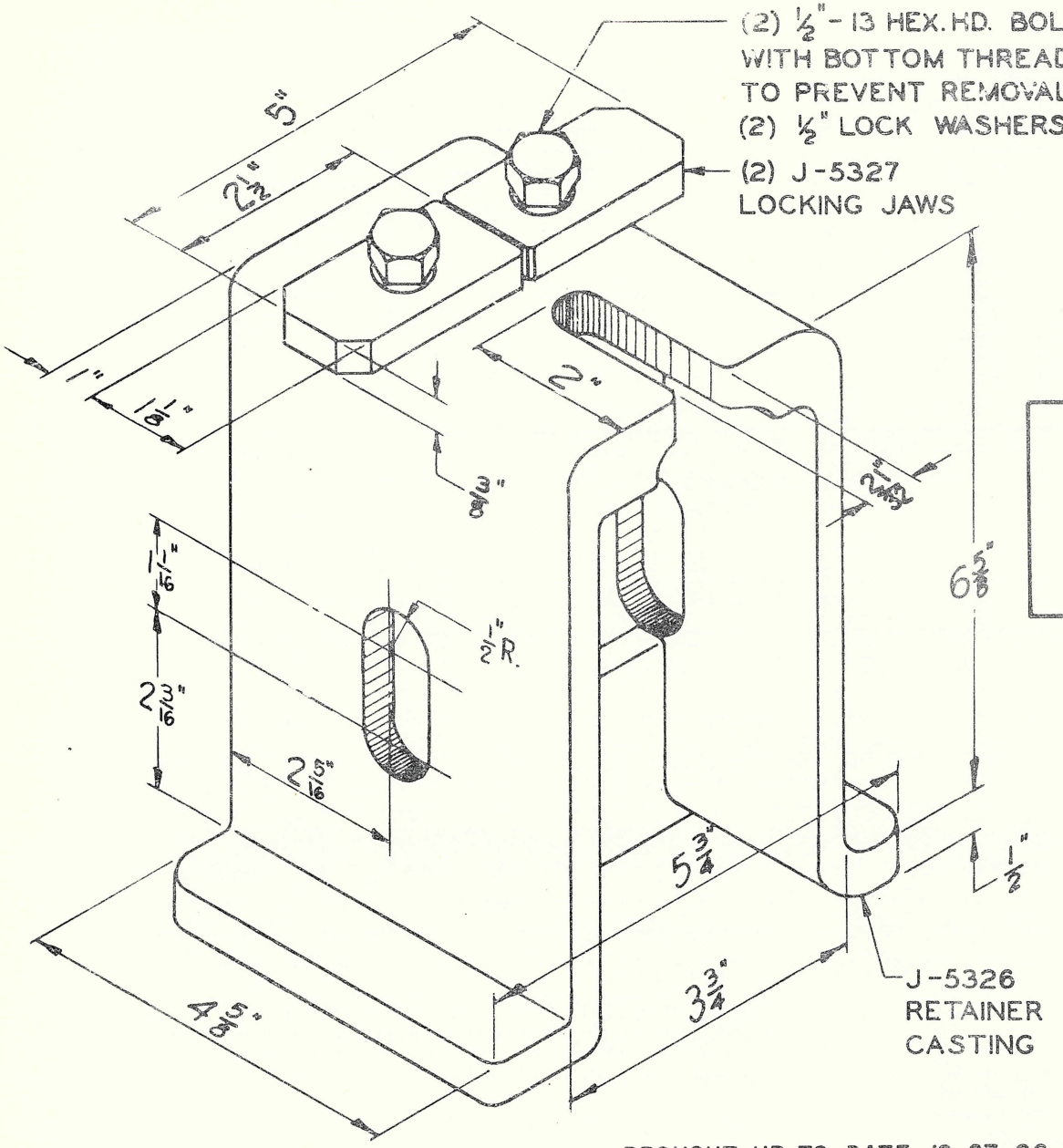

NOTE:
TO BE USED FOR
AAR SPEC. C-28A-1951
STAKE POCKETS ONLY

WESTERN PART NO. J-5328

PATENT PENDING

BROUGHT UP TO DATE 10-27-66

WEIGHT: 11.8 LBS.

WESTERN INDUSTRIES, INC.

CHICAGO 32

STAKE POCKET
CHAIN RETAINER FOR
WESTERN ALL PURPOSE
CHAIN TIE-DOWN
- SALES DRAWING -

SCALE: NONE

DRW. M.H. 6-24-65

DWG. NO. J-5328-SD

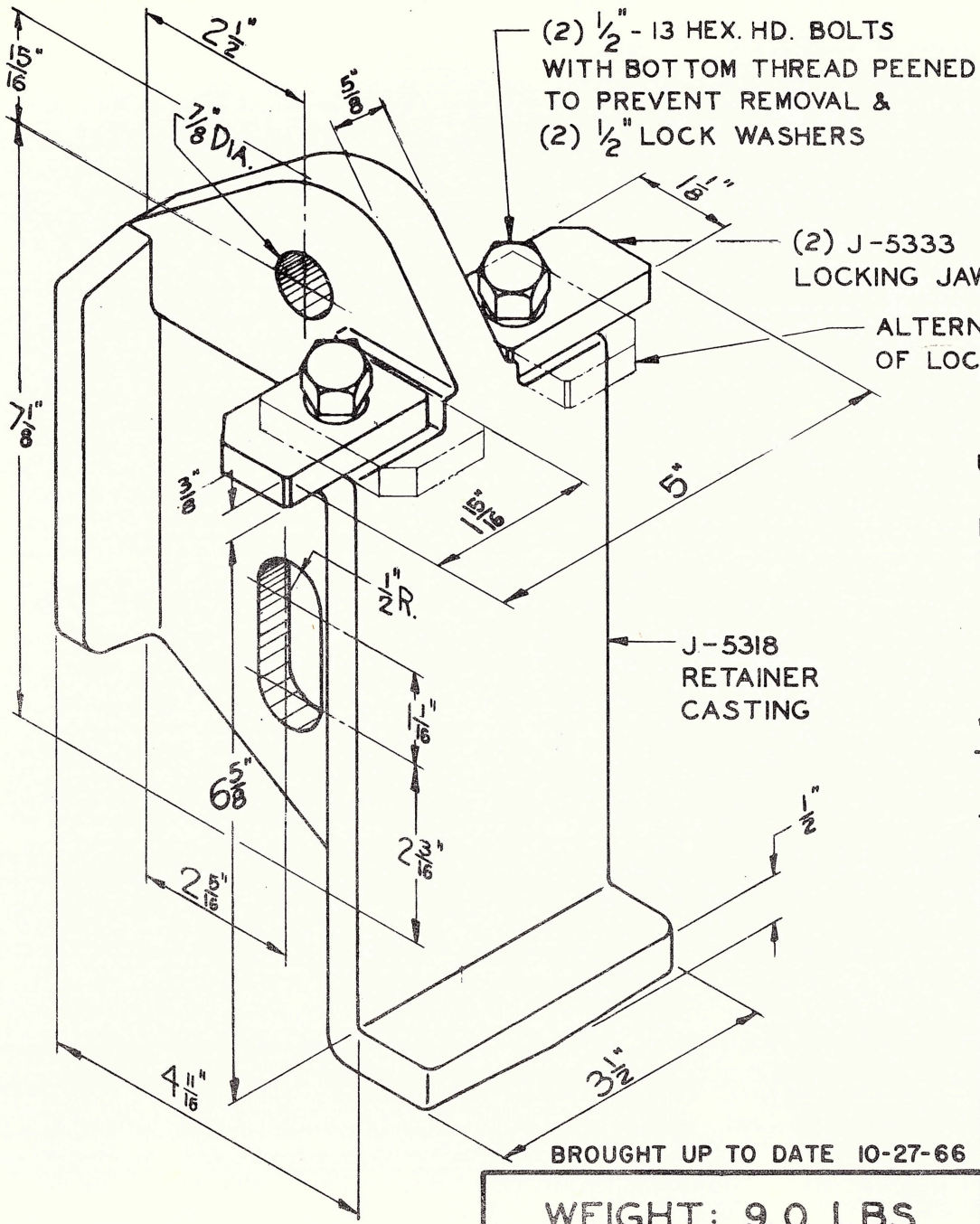

NOTE:

TO BE USED FOR
AAR SPEC. C-28A-1951
STAKE POCKETS ONLY

USE WESTERN PART NO. J-5335
1/2" MECH. COUPLING LINK
FOR CONNECTION WITH ANY 1/2"
WESTERN CHAIN TIE-DOWN ASSY.

WESTERN PART NO. J-5331

PATENT PENDING

BROUGHT UP TO DATE 10-27-66

WEIGHT: 9.0 LBS.

WESTERN INDUSTRIES, INC.

CHICAGO 32

STAKE POCKET
CHAIN RETAINER FOR
WESTERN ALL PURPOSE
CHAIN TIE-DOWN
- SALES DRAWING -

SCALE: NONE

DRW. M.H. 6-9-65

DWG. NO. J-5331-SD

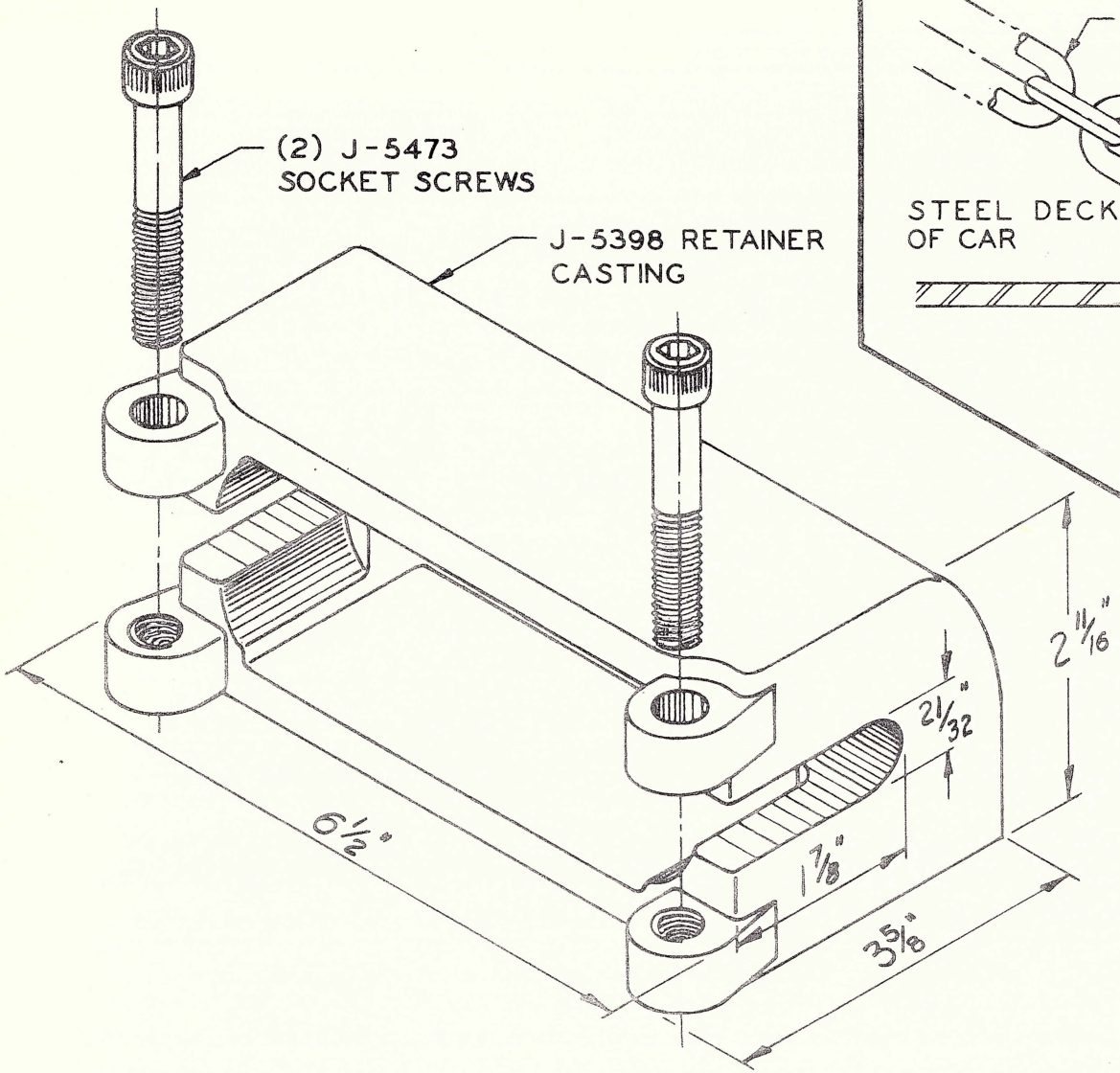

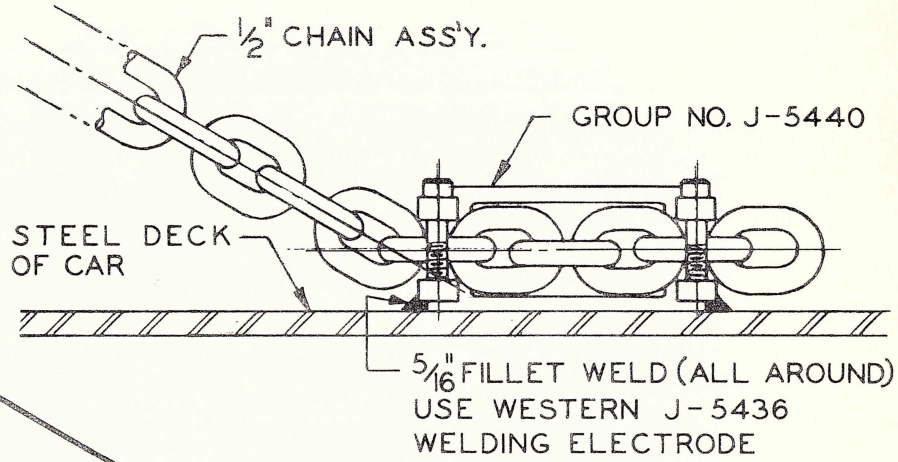

- INSTALLATION DETAIL -

WESTERN GROUP NO. J-5440

PATENT PENDING

METHOD OF INSTALLATION: TO BE WELDED TO DECK OF FLAT CAR.

NOTE: THIS INBOARD RETAINER WILL ACCEPT ANY 1/2" WESTERN CHAIN TIE-DOWN ASSEMBLY.

WEIGHT: 6.6 LBS.

WESTERN INDUSTRIES, INC.

CHICAGO 32

INBOARD CHAIN RETAINER
GROUP FOR
WESTERN ALL PURPOSE
CHAIN TIE-DOWN

- SALES DRAWING -

SCALE: NONE

DRW. M.H. 10-3-66

DWG. NO. J-5440-SD

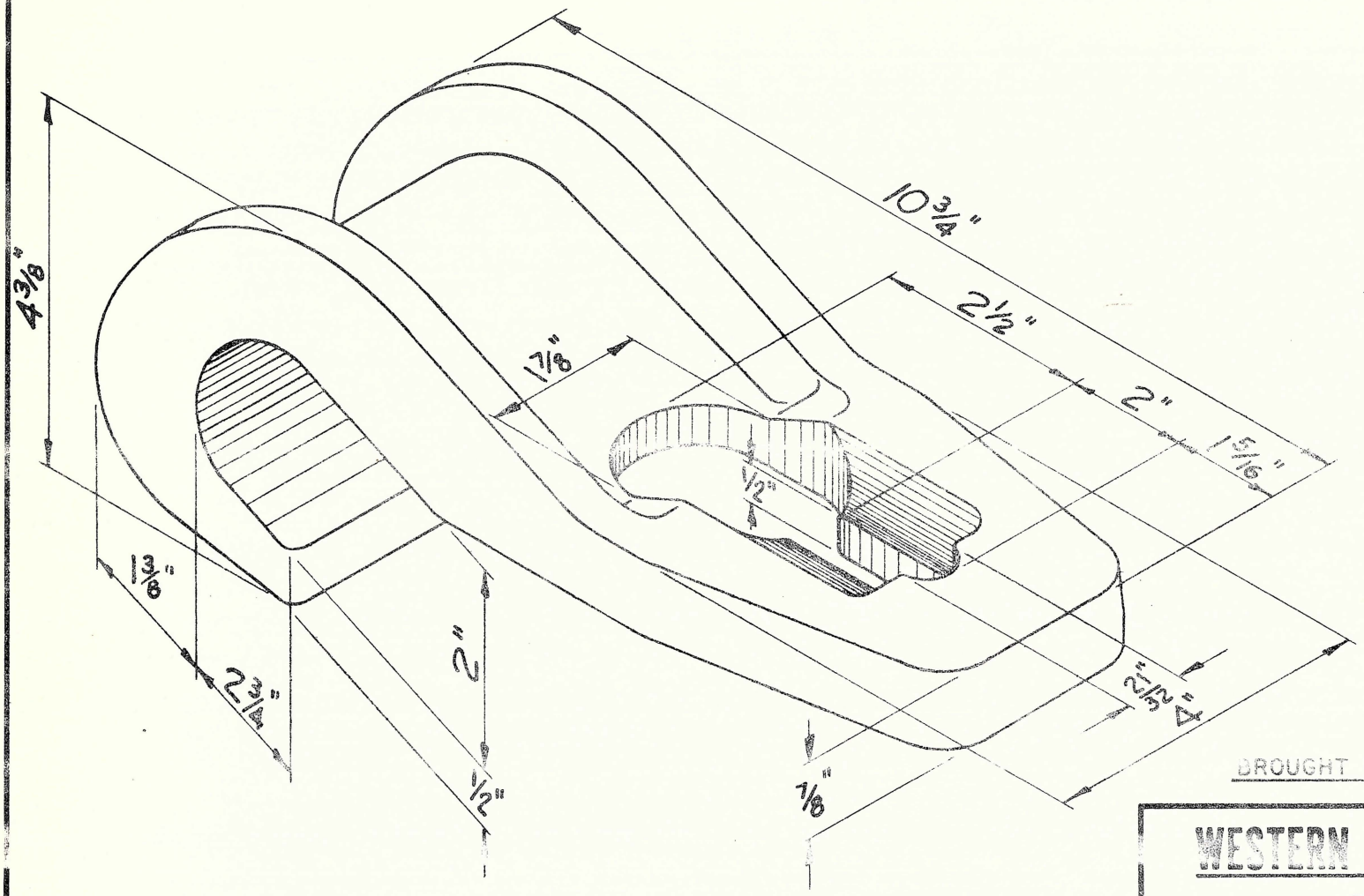

BROUGHT UP TO DATE 3-22-66

WESTERN PART NO. J-5348

PATENT PENDING

WEIGHT: 9.8 LBS.

WESTERN INDUSTRIES, INC.	
CHICAGO 32	
CRAWLER TREAD CLAMP	
FOR	
WESTERN ALL PURPOSE	
CHAIN TIE-DOWN	
-SALES DRAWING-	
SCALE: NONE	DWG. NO.
DRW. M.H. 8-26-65	J-5348-SD

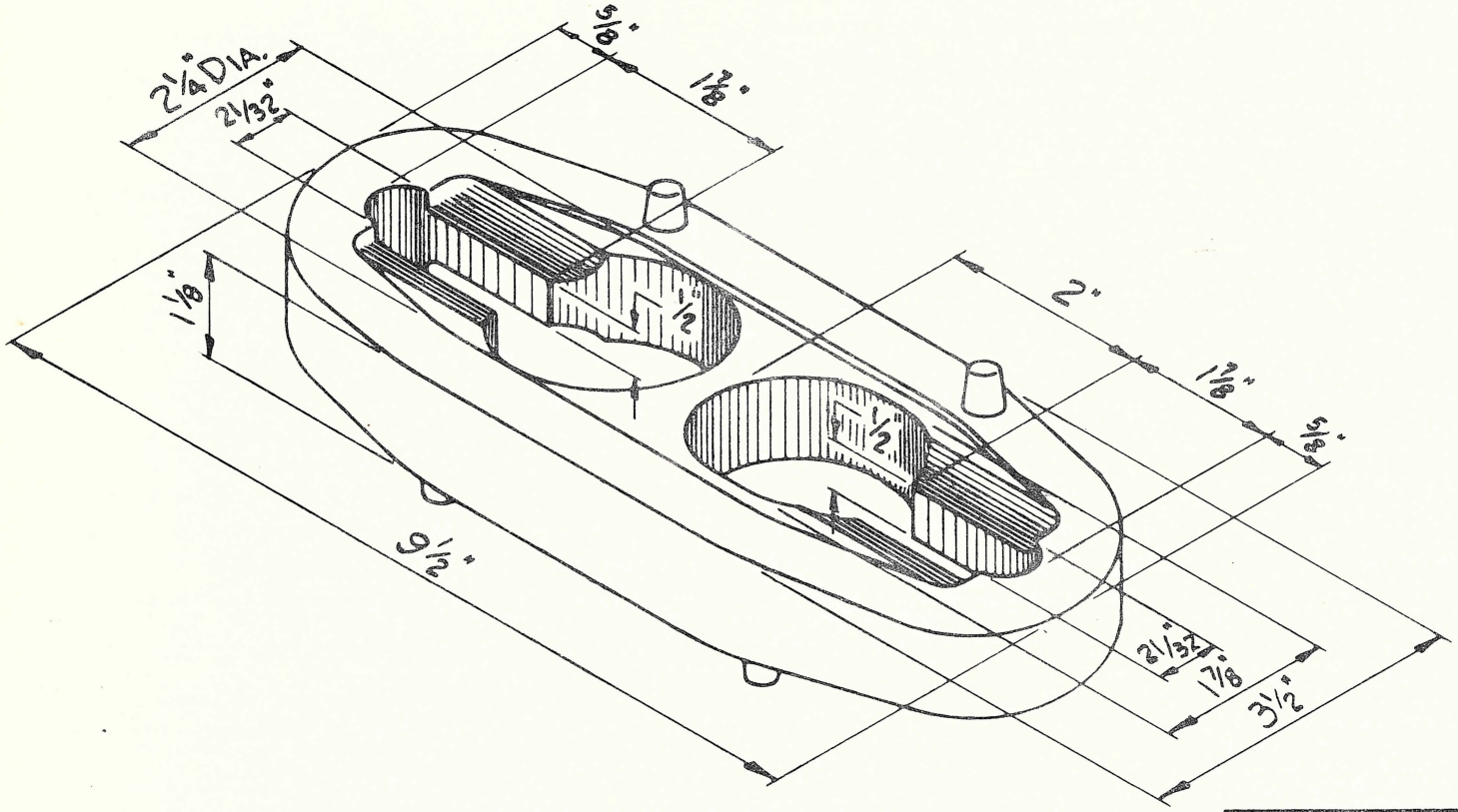

WESTERN PART NO. J-5399

PATENT PENDING

WEIGHT : 4.9 LBS.

WESTERN INDUSTRIES, INC.

CHICAGO 32

SLIDE-LOCK

FOR

WESTERN ALL PURPOSE

CHAIN TIE-DOWN

- SALES DRAWING -

SCALE: NONE	DWG. NO.
DRW. M.H. 10-10-66	J-5399-SD

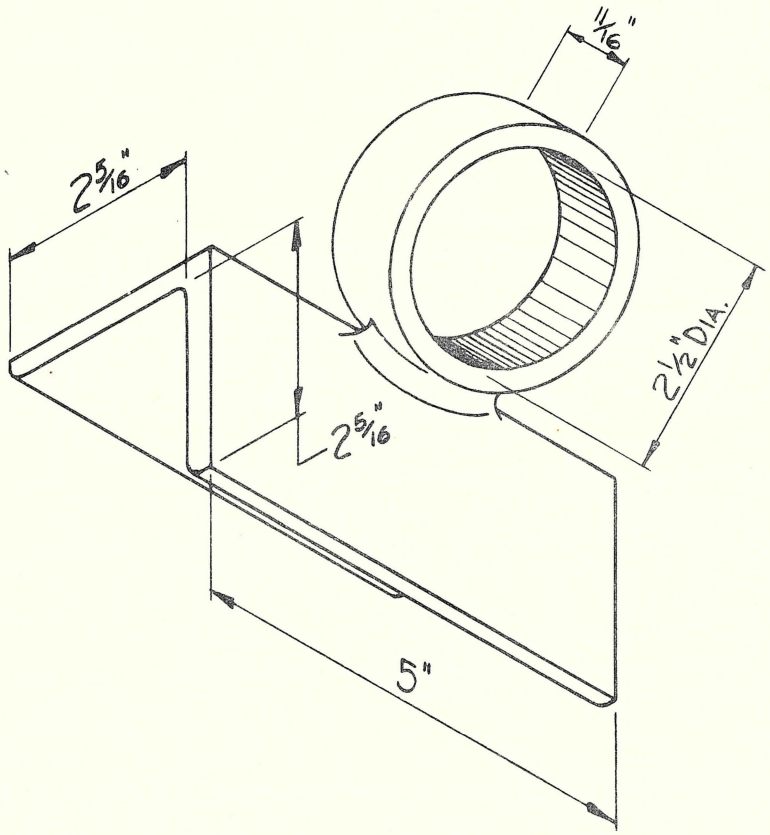

WESTERN PART NO. J-5385

WESTERN INDUSTRIES, INC.

CHICAGO 32

LOAD PROTECTOR

FOR

WESTERN ALL PURPOSE

CHAIN TIE-DOWN

- SALES DRAWING -

WEIGHT: 1.6 LBS.

SCALE: NONE

DRW. M.H. 10-14-66

DWG. NO. J-5385-SD

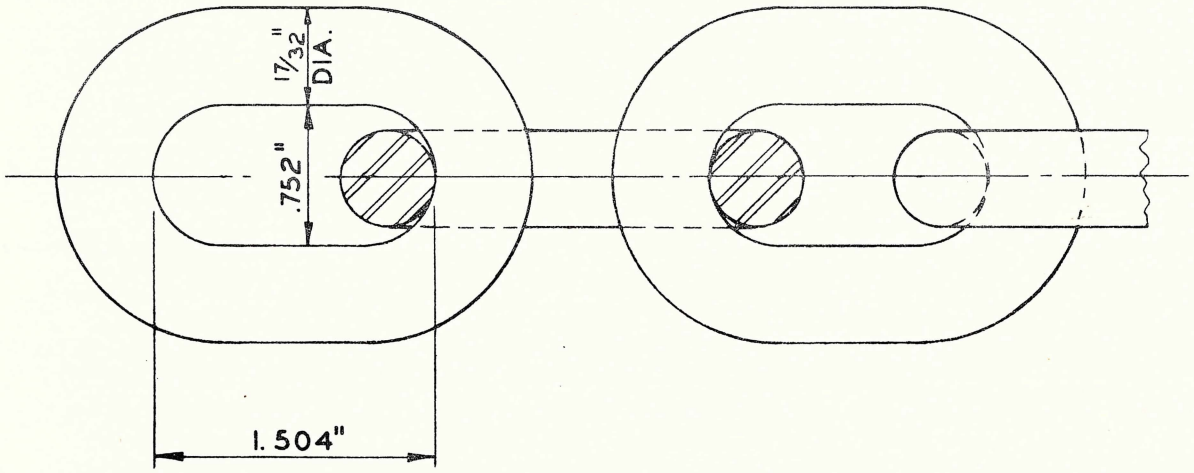

1/2" SUPER-ALLOY CHAIN	
MIN. TENSILE STRENGTH OF MAT'L. PSI	150,000
WORKING LOAD LIMIT LBS.	13,750
MIN. PROOF TEST LBS.	27,500
NOMINAL WEIGHT PER 100-FT. LBS. ± 4%	288
SIZE OF MATERIAL DIA.	17/32"
NOM. INSIDE LENGTH OF LINK ± 4%	1.504"
NOM. INSIDE WIDTH OF LINK ± 4%	.752"

Supersedes J-5334-SD
Dated 6/22/65

WESTERN INDUSTRIES, INC.

CHICAGO 32

CHAIN PROPERTIES

FOR

WESTERN ALL PURPOSE

1/2" SUPER-ALLOY CHAIN TIE-DOWN

- SALES DRAWING -

SCALE: NONE

DRW M.H. 8/25/65.

DWG. NO. J-5355-SD

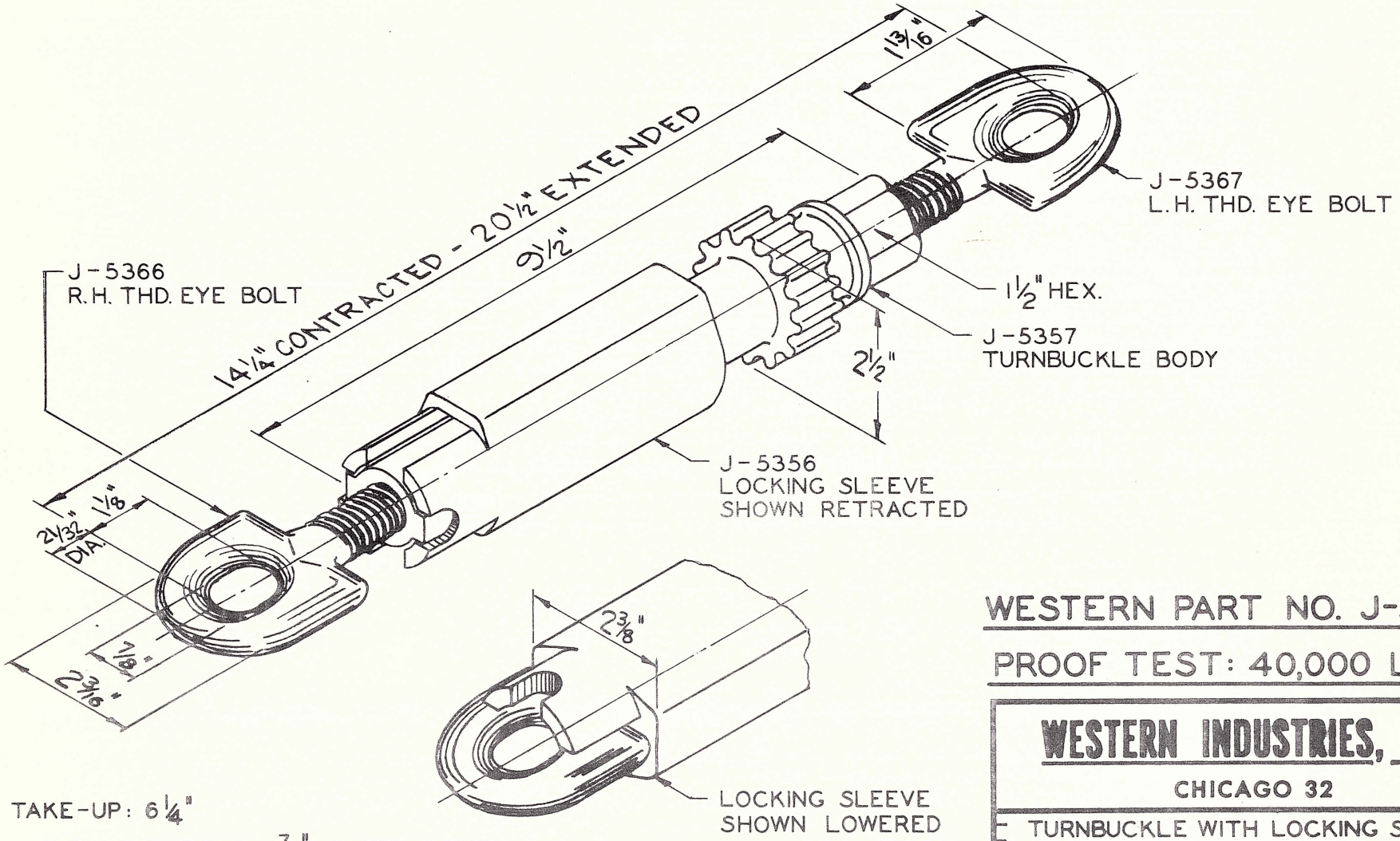

TAKE-UP: 6 1/4"

EYE BOLT THREAD: 7/8"-6 STD. ACME

WELD BEAD APPLIED ON END OF EACH EYE BOLT TO PREVENT REMOVAL

USE WESTERN PART NO. J-5358 WRENCH

WEIGHT: 8.3 LBS.

WESTERN PART NO. J-5365

PROOF TEST: 40,000 LBS.

WESTERN INDUSTRIES, INC.

CHICAGO 32

TURNBUCKLE WITH LOCKING SLEEVE

FOR

WESTERN ALL PURPOSE

CHAIN TIE-DOWN

-SALES DRAWING-

SCALE: NONE	DWG. NO.
DRW. M.H. 10-9-66	J-5365-SD

METHOD OF INSTALLATION:

TO BE WELDED TO SIDE SILL OF FLAT CAR.

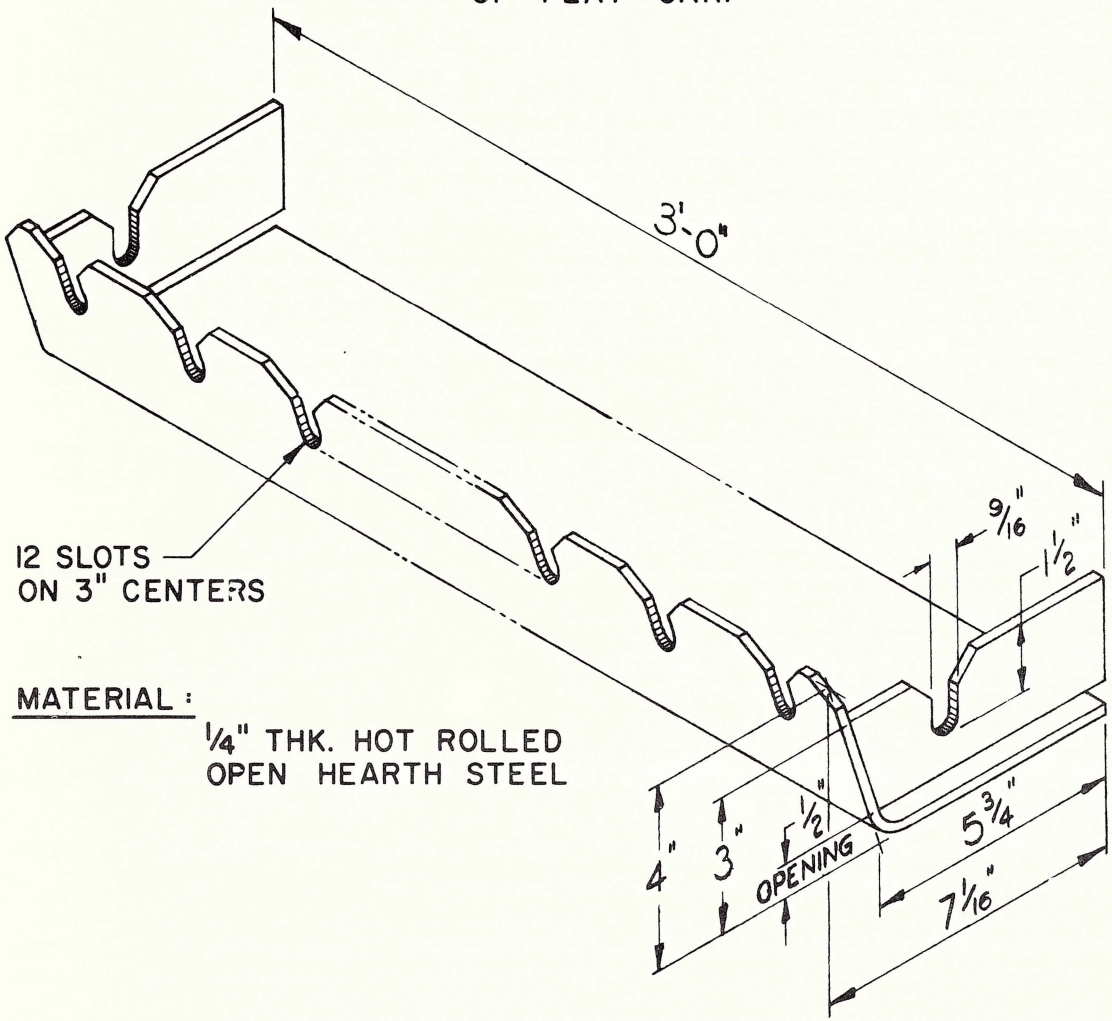

MATERIAL:

1/4" THK. HOT ROLLED OPEN HEARTH STEEL

WESTERN PART NO. J-5454

WEIGHT: 26.0 LBS.

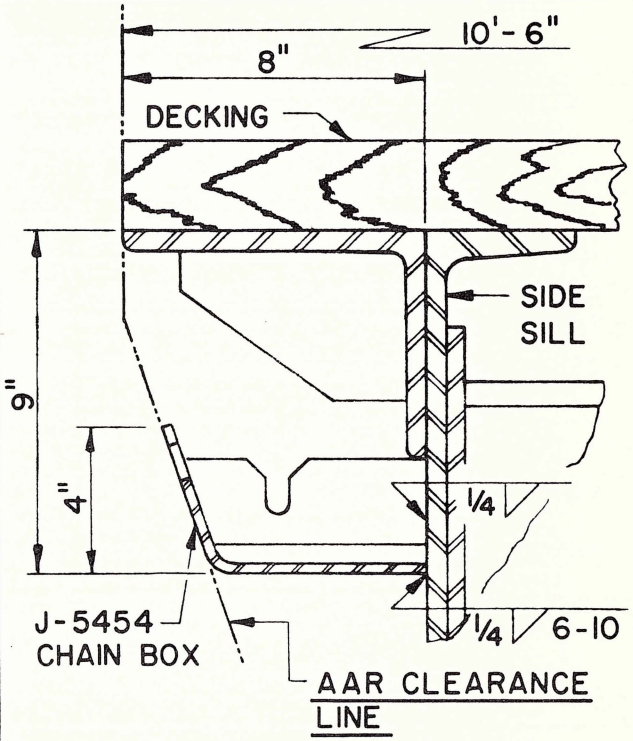

-SECTION THRU SIDE SILL-

-INSTALLATION DETAIL-

WESTERN INDUSTRIES, INC.

CHICAGO 32

CHAIN STORAGE BOX
FOR
WESTERN ALL PURPOSE
CHAIN TIE-DOWN
-SALES DRAWING-

SCALE: NONE	DWG. NO.
DRW. M.H. 11-16-66	J-5454-SD

SYM.	REVISIONS	DATE
A	A_1 = WAS SHOWN AS J-5360 A_2 = WAS SHOWN AS J-5860 ALS	7-5-66

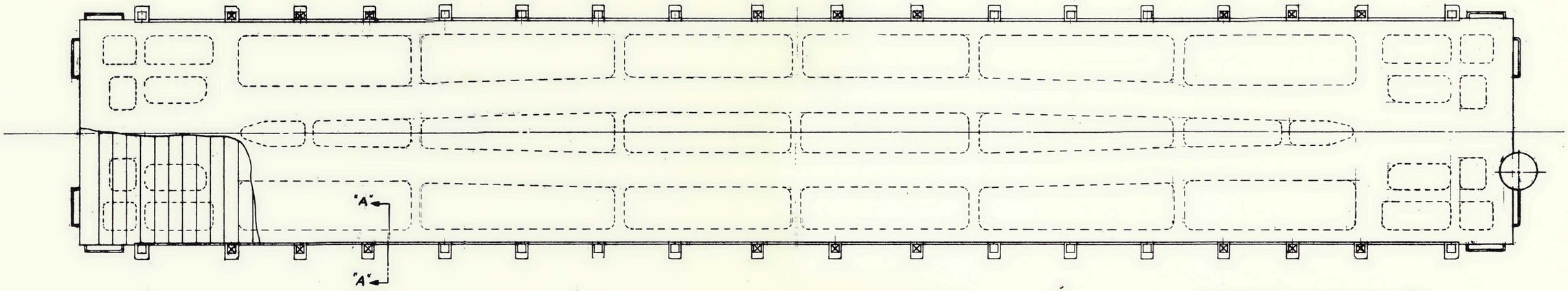

PLAN VIEW OF 60 FT. FLAT CAR
(CAST STEEL UNDERFRAME)

VIEW "A" "A"
TYPICAL APPLICATION OF TIE-DOWN IN STAKE-POCKET

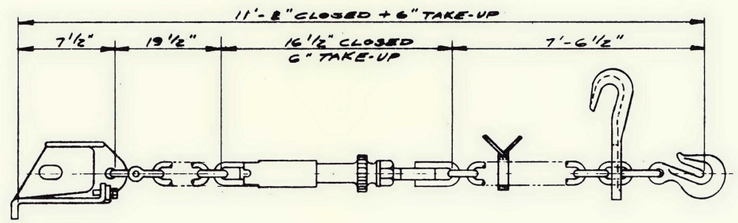

WESTERN ALL PURPOSE 1/2" SUPER-ALLOY CHAIN TIE-DOWN
PROOF TEST: 27,500 LBS.
WESTERN PART NO. J-5390 (A1)

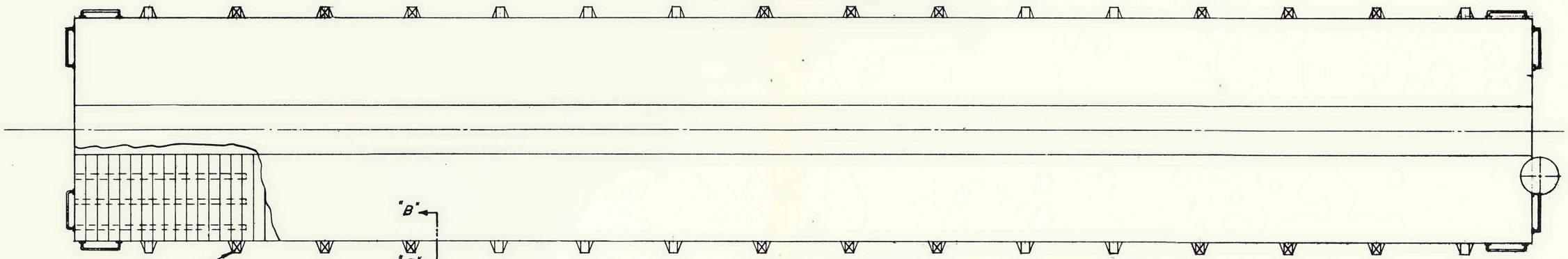

RECOMENDED LOCATIONS FOR STAKE POCKET RETAINERS MARKED BY "X" AS USED ON CARS IN HEAVY TRACK TYPE EQUIPMENT POOLS.

VIEW "B" "B"
TYPICAL APPLICATION OF TIE-DOWN IN STAKE-POCKET

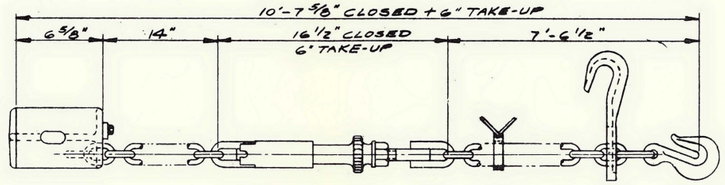

WESTERN ALL PURPOSE 1/2" SUPER-ALLOY CHAIN TIE-DOWN
PROOF TEST: 27,500 LBS.
WESTERN PART NO. J-5400 (A2)

PLAN VIEW OF 60 FT. FLAT CAR
(WELDED STEEL UNDERFRAME)

WESTERN INDUSTRIES, INC.
CHICAGO 32

PROPOSED TIE-DOWN LOCATION FOR 60'-0" FLAT CAR.

APPROVED BY	DRAWN: LAT	DWG. NO.
TOLERANCE UNLESS OTHERWISE SPECIFIED FRACTIONAL DIMENSIONS ± 1/64" DECIMAL DIMENSIONS ± .002"	CHK. ALS 7-5-66	J-5437-R

REV-A

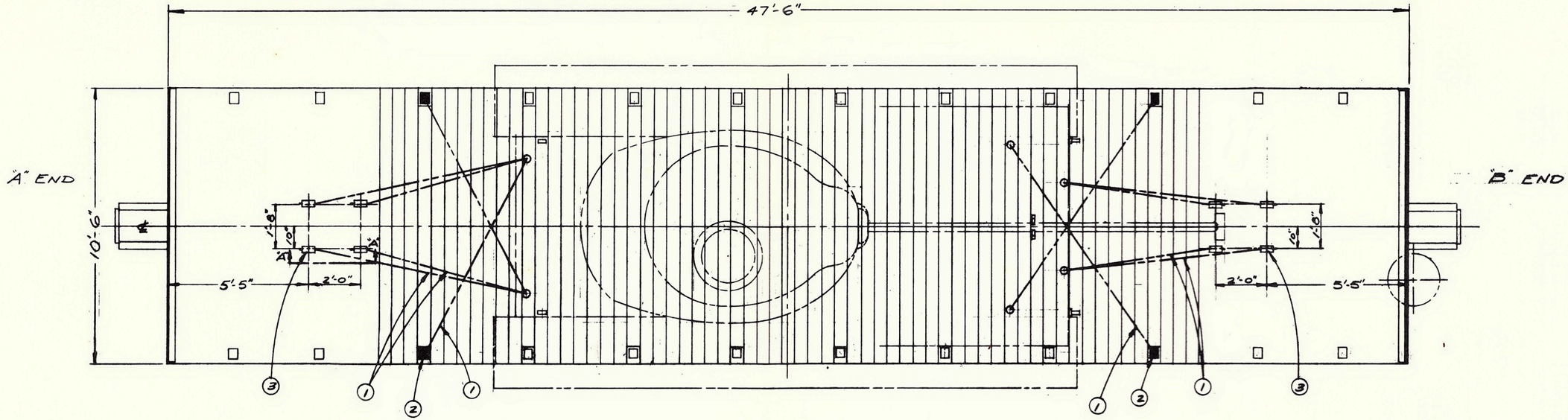

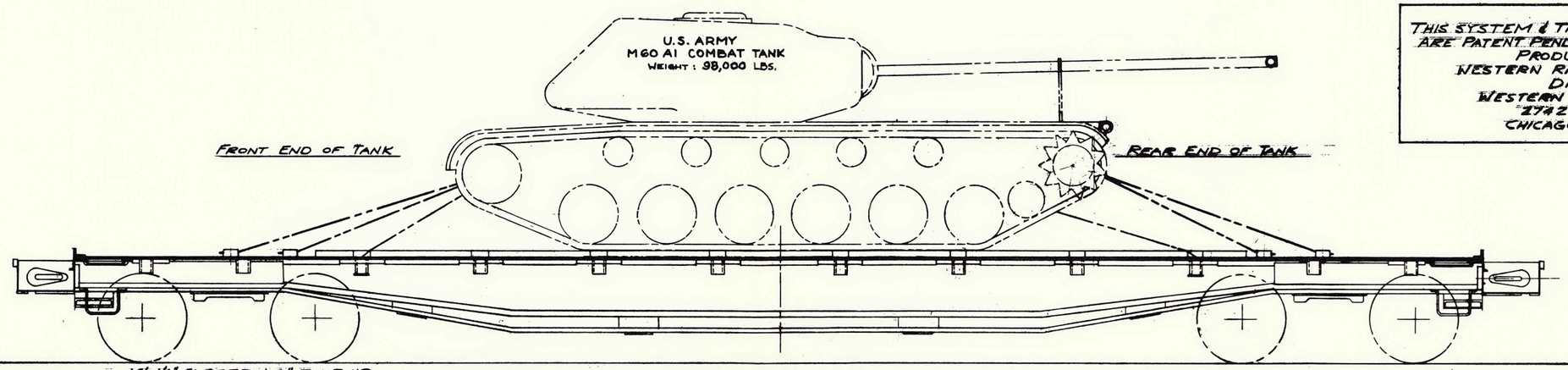

THIS SYSTEM & TIE DOWN ASSEMBLIES ARE PATENT PENDING AND ARE A PRODUCT OF WESTERN RAILROAD SUPPLY CO. DIVISION OF WESTERN INDUSTRIES, INC. 2742 W. 36TH. PLACE CHICAGO, ILL. 60632

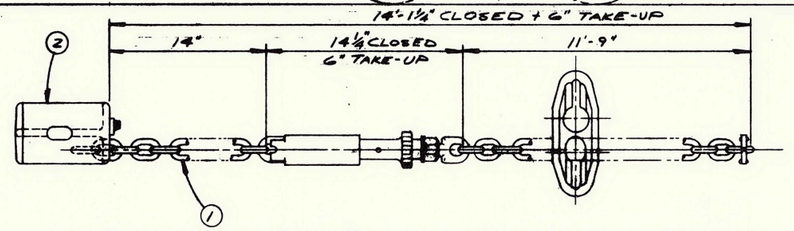

OUTBOARD CHAIN ASS'Y. WITH STAKE POCKET RETAINER

ITEM	DESCRIPTION	MATERIAL	PART No	QTY	REMARKS
1	WESTERN PATENT PENDING ⅝" CHAIN ASS'Y - COMPLETE	ALLOY STL.	J5433	12	
2	WESTERN PATENT PENDING STAKE POCKET RETAINER	DUCT. IRON	J53286	4	
3	WESTERN PATENT PENDING INBOARD RETAINER GROUP	CAST ALLOY STL	J5440	8	

CHAIN, CHAIN HARDWARE & RETAINERS DATA

MAX. WORKING LOAD OF ENTIRE ASS'Y: 13,750 LBS.
MIN. PROOF TEST OF ENTIRE ASS'Y.: 27,500 LBS.

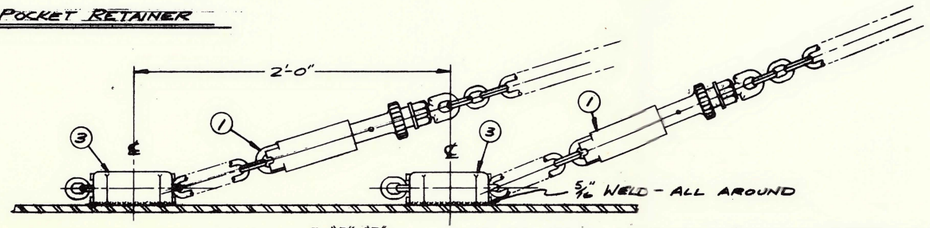

SECTION "A-A" - INBOARD CHAIN ASS'Y. WITH INBOARD RETAINER

APPROVED BY	
TOLERANCE UNLESS OTHERWISE SPECIFIED FRACTIONAL DIMENSIONS ± 1/64" DECIMAL DIMENSIONS ± .005"	
SCALE: 1/4	DWG. No. J-5450-R
DRN. C.P. 8-30-66	

WESTERN INDUSTRIES, INC.
CHICAGO 32

HEAVY DUTY TIE-DOWN SYSTEM FOR U.S. ARMY M60A1 COMBAT TANK ON 47'-6" FLAT CAR